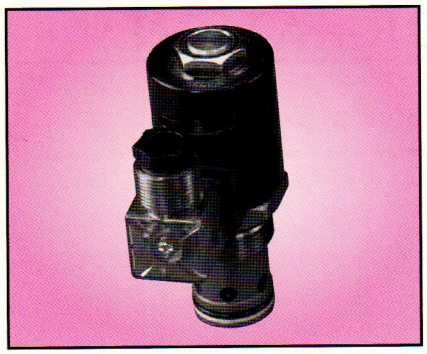

■ORDERING INFORMATION

V8066	✳✳✳	✳✳	10
電動止回閥 Cartridge solenoid check VALVE	線圈型式 Coil type D12:DC12v D24:DC24v A11:AC110v A22:AC220v RA 110V RA 220V (50 / 60 Hz)	OPTION 標準 None:Standard(20) 付手動 OM:With manual	設計號碼 Design number

Graphic Symbol

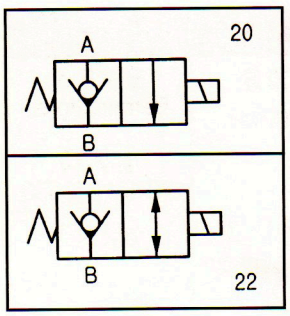

■DIMENSIONS

V8066									
常閉 Normally closed-NC 常開 Normally open-NO				最大流量 Max. flow Litres/min	額定流量 Rated flow	最大壓力 Max. pressure kgf/cm²(psi)	溫度範圍 Operating termperature range	重量 kg(lbs)	接線方式 Terminations 插頭式 DG:DIN 43650
NC	20	NO	–	150 l/min (40 G.P.M)	120 l/min (32 G.P.M)	250(3500)	-20℃～120℃	0.68(1.5) including coil	
	22		–						

■DIMENSIONS
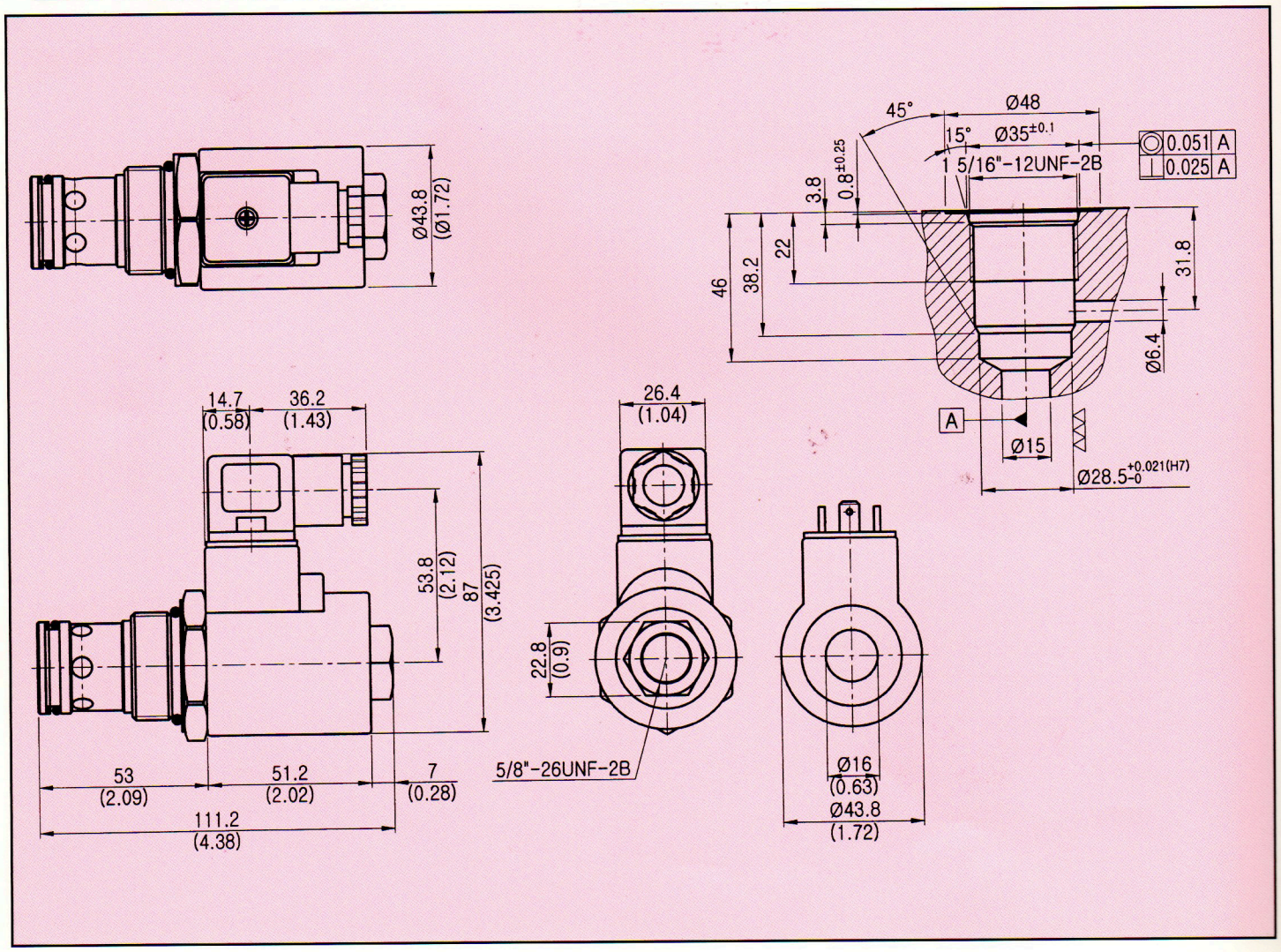
MILLMETERS (INCHES)